GanzKK

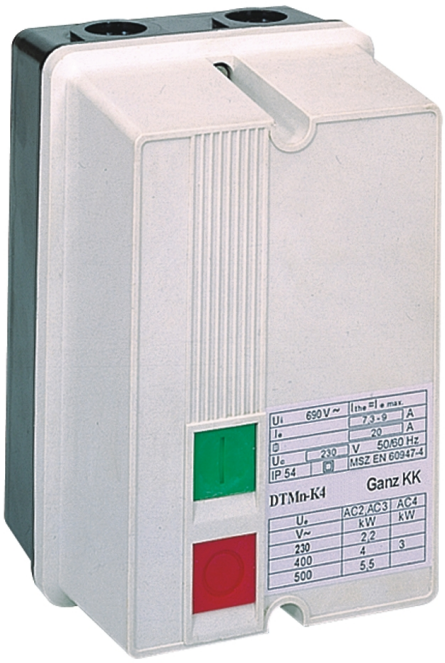

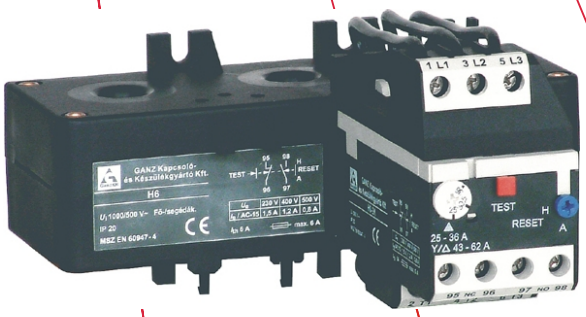

THERMAL RELAYS, MOTORSTARTERS

Thermal relays, motorstarters

MH mini thermal relay
plugged version

H0-2K thermal relay
with adapter

H0-2K thermal relay
plugged version

T 63I thermal relay
plugged version

H6 thermal relay
with current transformer

MK + MH
motorstarter

DLK-4…DLK-18 + H0-2K
motorstarter

DLK-22…DLK-37 + T 63I
motorstarter

Introduction

Using contactors, overload (thermal) relays and other control elements several motorstarter, reversing, star-delta and other combinations can be designed to protect the electrical motors against overloads. Combinations can be assembled by their user in the place of application.

Note: We are using the term "combination" in slightly different understand from item 3.2.7 of standard EN 60947-4-1:2002. For reasons of usage we are designating as **motorstarter-combination** that assembles too, which are composed of contactors, overload protection devices but they do not consist short-circuit protection and enclosures.

The purpose of this catalogue is to make easier choosing of devices. It is recommended to use the following catalogue: „CONTACTORS from 2,2 kW to 132 kW".

Switching and protective devices are in this catalogue:

Elements of motorstarters:

Contactors:

- MK2, MK4 mini contactors

- DLK-4, DLK-5, DLK-7, DLK-11, DLK-15, DLK-18 DLK-22, DLK-30, DLK-37, DLK-45, DLK-55, DLK-75, DLK-90, DLK-110, DLK-132

Overload (thermal) relays:

- MH mini thermal relay
- H0-2K thermal relay
- T 63I thermal relay
- H6 thermal relay with current transformer

Control and protective elements:

- YD timer
- MV-e mechanical interlock
- BB mechanical interlock
- KS…auxiliary contacts
- Hi…and Li…auxiliary contacts
- S… auxiliary contacts
- PK22E auxiliary contacts
- PKB 11 auxiliary contacts

Compact motorstarters:

- DTMn-K5 and DTMn-K11 enclosed motorstarter
- GMV 25f manual motorstarter
- GMB-T enclosed motorstarter combination

The overload relays, motorstarters and combinations refer to requirement of standard EN 60947-4-1.

At the end of this catalogue the following tables and diagram can be found to choose of motorstarters:

Table 1. Switchable powers of contactors
Table 2. Fit of contactors and thermal relays
Table 3. Switching current-ranges of motorstarter combinatios
Table 4. Switching current-ranges of star-delta combinatios
Diagram 1. Electrical durability related to break current

1. Overload (thermal) relays

The three phase thermobimetall relays are suitable for the protecting of the electric consumers especially electric motors against overcurrent and overheating.

Type-variants

Commom characteristics of type-variants

The compensating bimetallic unit ensures the operation irrespectively the actual ambient temperature (within the given wide temperature-range).
The resetting mode (manual or automatic) can be chosen.
The thermal relays have a double slide-system which operates the switch - off mechanism, in case of phase failure. It releases faster: (by standard within 2 hours at 15 % overload, but in practice after some minuts).TEST button is suitable for verification of the functional capability.
The contacting mechanism contains two electrically independent NO and NC contacts

Time-current characteristics

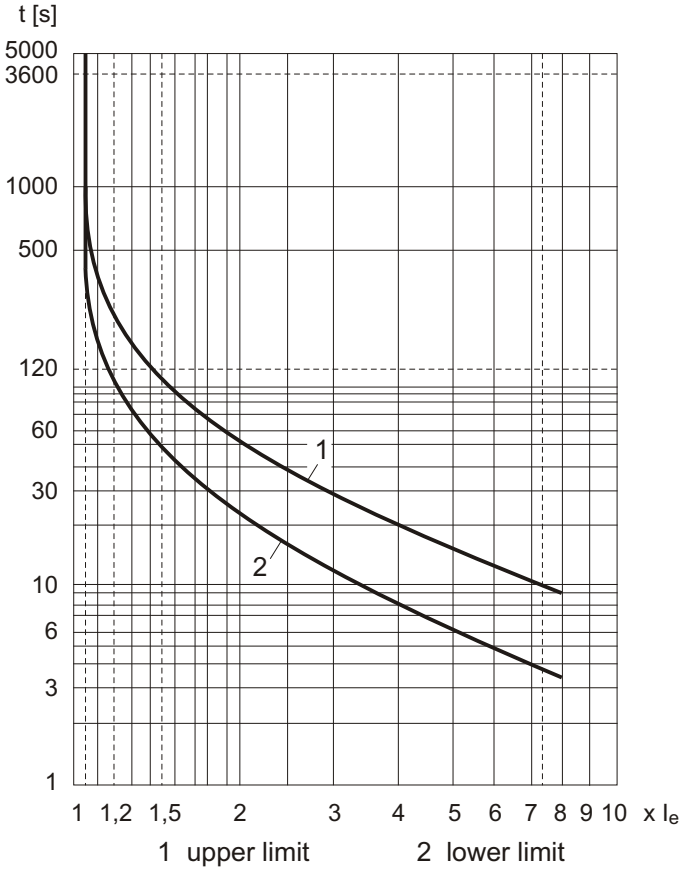

Contacts

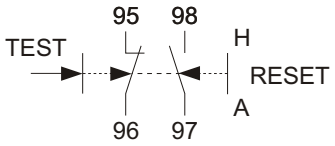

Time-values of release

Multiplies of current setting		Time of release [T_p]	Working condition
1,05 x I_e		after 2 hours	cold
1,2 x I_e		within 2 hours	warm
1,5 x I_e		within 2 min	warm
Trip class: 10A	7,2 x I_e	2 < Tp < 10 s	cold
10		4 < Tp < 10 s	
20		6 < Tp < 20 s	

1.1 MH mini thermal relay

The mini thermal relays are produced in the current-range of 0,11 A...14 A covered by 13 differently range devices. They can be plugged directly to the lower terminals of the MK2- and MK4- type minicontactors, they cannot mounted independently to a plate or rail.

Before starting of the motor, the rated current should be adjusted by the arrow on the knob.
The resetting mode („H" for manual and „A" for automatic) can be chosen by the blue (RESET) knob, change-over carry out by push and turn of the knob with a screw-driver.
Before putting into operation pudh the RESET knob.

1.2 H0-2K thermal relay

The current-ranges are available from 0,2 A to 32 A covered by 13 differently set devices. Mounting is possible to 35 mm rail (snap-on) or fixed with three M4 screws to a mounting plate. In the final technical execution (with adapters) the thermal relay can be connected by wiring to any contactor. The device can be plugged directly to lower terminals (2T1, 4T2, 6T3) of DLK-4-.., DLK-5-.., DLK-7-.., DLK-11-.., DLK-15 and DLK-18 contactors after removing the fixing and connecting elements. The right-side terminal (L3) of the H0-2K relay should be put to the correct position before connecting to the contactor.
Marks of the lower, middle and the upper values of current are printed on the adjusting knob (lower and upper limits on the front plate too). The value of the motor's rated current should be adjusted by the knob to the arrow.
The corresponding lower and upper limits of the line-currents (in star-delta combination) can be found under the adjusting knob.
The resetting mode ("H" for manual, „A" for automatic) can be chosen by the right side (blue) button.
By pushing the „TEST" button (red), which can be found in the middle, the (circuit) connection breaks between opening contacts (95, 96) and (circuit) connection is made between closing contacts (97, 98).

1.3 T63I thermal relay

The current-ranges are available from 21 A to 75 A covered by 4 differently devices. The thermal relay can be plugged to lower terminals of DLK-22-11, DLK-30-11 and DLK-37-11 contactors. It cannot be mounted independently.

1.4 H6 thermal relay with reeveable current-transformer

The reevealable current-transformer is available between 25 and 250 A, covered by 6 ranges.
It can be used for motorstarter, reversing, star-delta and other combinations with DLK-15, DLK-18, DLK-22-11, DLK-30-11, DLK-37-11, DLK-45-22, DLK-55-22, DLK-75-22, DLK-90-22, DLK-110-22, DLK-132-22 contactors.
The H0-2K type thermal relay and the three-phase current-transformer make one constructive unit. The wound iron cores of the current-transformer are in a thermoplastic body. The insulated connecting wires of the main current paths should be reeved through the holes of the body. The lead-in conductors of the secondary winding are connected to the proper terminals of the thermal relay by our factory.

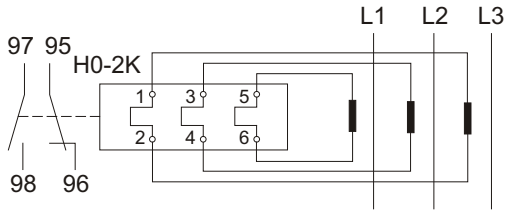

Connection diagram

Technical data of thermal relays

Technical data	**MH**	**H0-2K**	**T63I**	**H6**
Application	plugged to contactors MK2 and MK4	plugged to DLK-4-...DLK-18 contactors or mounted independently	plugged to DLK-22-... DLK-37 contactors	wiring with any contactor
Rated insulation voltage [V]	690	500	690	1000
Ambient and compensating temperature [°C]	-25...+50	-25...+50	-25...+50	-25...+50
Loss of main current paths	~ 2W/pole	2,5...6 VA	2,3...6 W	
Trip class	10 A	10	10A	10
Switching frequency [c/h]	15	15	15	15
Mass [kg]	0,1	0,17	0,28	1,05
Degree of protection	IP 20	IP 20	IP 10 / IP20	IP 20
Mechanical durability [c]	5 x 10^3	10^4	3 x 10^3	10^4
Connection [mm^2]	rigid, stranded, flexible: 1x 0,75 - 2 x 2,5 with end sleeve: 1 x 0,5 - 2 x 1,5	upper: rigid: 1 x 1...6 flexible: 1 x 1...4 lower: rigid: 1 x 1...6 1 or 2 x 1...4 flexible: 1 or 2 x 1...4	rigid: 2,5...16 flexible: 2,5...25	21-51 A: 25 mm^2 51-250 A: 120 mm^2
Built-in auxiliary contact: I_{th} [A] (1NO + 1 NC) I_e AC-15, 230 V I_e AC-15, 400 V connection [mm^2]	6 1,5 0,5 2 x 1...2,5	6 1,5 1,2 1 x or 2 x 0,75...1,5	6 2 1 x 0,75...1,5	6 1,5 1,2 1 x 0,75...1,5
Current range/ Fuse [A]	0,11 - 0,16/0,5 0,16 - 0,25/1 0,25 - 0,4/2 0,4 - 0,6/2 0,6 - 0,9/4 0,9 - 1,3/6 1,3 - 1,9/6 1,9 - 2,8/10 2,8 - 4/10 4 - 6/16 6 - 9/20 8 - 11/20 11 - 14/25	0,2-0,3/2-2 0,3-0,45/2-2 0,45-0,67/2-2 0,67-1,0/2-2 1,0-1,5/2-4 1,5-2,2/4-10 2,2-3,3/4-10 3,3-4,9/6-16 4,9-7,3/10-20 7,3-11/16-25 11-16,5/20-35 16,5-25,0/35-50 21,5-32,0/35-50	21-30/50-63 30-40/50-60 43-63/63-100 52-75/80-125	25-36/50-80 34-51/63-100 51-76/100-160 76-113/160-200 113-168/200-250 168-250/250-315

2. Combinations

2.1 Compact direct motorstarters

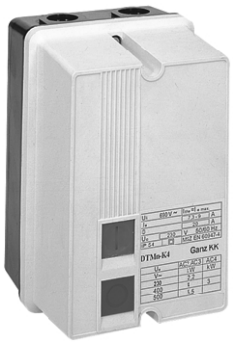

2.1.1 Enclosed direct motorstarter

Inside enclosure are available 1 pc DLK- contactor, 1 pc H0-2K thermal relay, 2 pcs push-buttons and 1 pc earth terminal wiring.
Type-variants: DTMn-K5 and DTMn-K11.
Mounting position: vertical mouting plate (deviation is ±22,5°) with vertical main wires
Mounting: 2 pcs M5×20 screws (attached).
Ambient temperature: -25…+50 °C.
Degree of protection: IP 54.

Switching (motor) power [kW]:

		DTMn-K5	DTMn-K11
AC-2	220 V	3	5,5
	400 V	5,5	11
AC-3	500 V	7,5	15
AC-4	400 V	4	5,5

Connection:

Connecting wires [mm²]	DIL-K...		H0-2K		Push-button type N
	main circuit	auxiliary circuit	main circuit	auxiliary circuit	
Rigid	1...6	1...2,5	1...6	0,75...1,5	1...2,5
Flexible	1...6	1...2,5	1...4	0,75...1,5	1...2,5
With ferrule	0,5...4	0,5...4	1...4	0,75...1,5	1...2,5
Terminal screws Size/tightening torque [Nm]	DLK-5: M3,5/1,2 DLK-11: M3,5/1,8	M3,5/1,2	M4/1,8	M3,5/1,2	-

Main circuit:

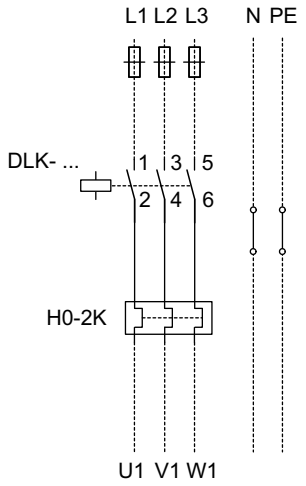

Auxiliary circuit:

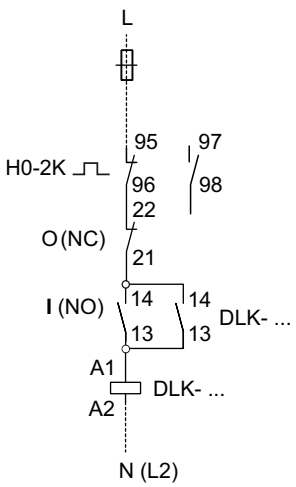

Operation:

The motorstarter-combination can be controlled by pushing of built-in pushbuttons, it can be switched-on by an outside NO contact connected to terminals of contactor № 13-14 .
The switch-off can be carried out by an NC contact connected in series with coil of contactor and by a connected to terminal № 95 of H0-2K overload relay. After an eventual trip of relay its reset can be made by pushing the red knob of enclosure.
Maximum values of short-circuit protecting fuses (type gG) in main contact system: DLK-5: 25 A,
DLK-11: 35 A
The DTMn-K11 can be loaded to 20 A max.
Selection diagram and tables consist further parameters need to choose the convenient device.

2.1.2 GMB-T motorstarter combination in enclosure

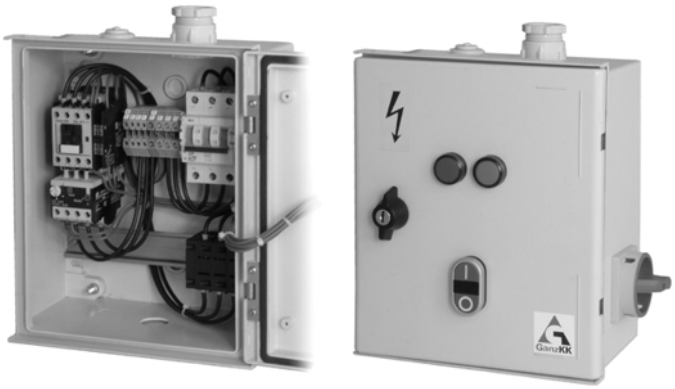

Several enclosed motorstarters can be produced for special order. The photo shows a motorstarter combination assembled in a shock-resistant fibreglass moulded enclosure (degree of protection IP 54), which consists 1 pc DLK contactor, 1 pc H0-2K thermal relay, 1 pc miniature circuit breaker, connecting terminals, 1 pc KKVL-… padlockable rotary switch-disconnector with emergency stop, (20 A or 32 A or 63 A), 1 pc twin touch push-button and signalling lamps with LED. The handle of the lock may be removable or with key applied.
The dimension and position of stuffing boxes are alternative. Dimensions of the enclosure on the photo are: 250×300×140 mm.

Type variants:

Type	Thermal relay [A]	Motor [kW]
GMB-T 4 - 0,3...11	0,2 - 0,3...7,3 - 11	0,06...4
GMB-T 5 - 16,5	11 - 16,5	5,5
GMB-T 7 - 16,5 / 25	11 - 16,5 or 16,5 - 25	7,5
GMB-T 11 - 25 / 32	16,5 - 25 or 21,5 - 32	11
GMB-T 15 - 32	21,5 - 32	15

2.1.3 GMV 25f manual motorstarter

Application, functions:

The motorstarter is suitable for switching and protection of individual a.c. motors against overload and short-circuit currents. It is sensitive to phase-failure. Mounting is possible by snap on a 35 mm rail and fit to 45 mm mounting slot. The operation is compensated to ambient temperature.

The convenient value (from current which are legible on the turn-knob) of the rated operational current of motor should be set to arrow which can be found under the knob.
In favour of correct function of motorstarter it should be loaded all three poles at single- and two-pole application as well.

Connection:

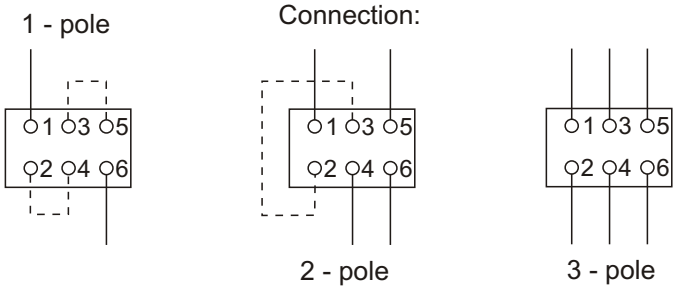

Technical data

General data

Mechanical endurance		$0{,}1\times10^6$ c
Ambient temperature	opened	-25 ... +50 °C
	in enclosure	-25 ... +40 °C
Temperature compensation		-5 ... +40 °C
Shock resistance (shock duration 20 ms)		20 g
Climatic conditions		IEC 68
Degree of protection		IP 20
Operating frequency		max. 40 c/h
Mass		max. 0,25 kg
Relevant standards		MSZ EN 60947-4

Fit of fuse:

Setting range of overload release [A]	Short-circuit release [A]	Fuse [A] 230 V	Fuse [A] 400 V	Rated short-circuit breaking capacity [kA] 230 V	Rated short-circuit breaking capacity [kA] 400 V
0,1-0,16	1,9	Fuse are not necessary, switches any value I_{cc}		100	100
0,16-0,25	2,6				
0,25-0,40	4,4				
0,40-0,63	8				
0,63-1,0	11				
1,0-1,6	19				
1,6-2,5	30				
2,5-4,0	42				
4,0-6,3	69		50		4
6,3-10	110	50		6	
10-16	210	63	63		
16-20	220				3
20-25	220				

Thermal relays, motorstarters

Main circuit

Rated insulation voltage		690 V
Rated impuls withstand voltage		6 kV
Free air thermal current $I_{th}>I_e$		max. 25 A
Electrical endurance (AC-3, up to 690 V)		$0{,}1\times10^6$ c
Cross section of connecting wires		0,75 ... 4 mm^2
Rated short-circuit breaking capacity	to 4 A	100 kA
	to 16 A	4 kA
	to 25 A	3 kA

Auxiliary circuit

Rated insulation voltage		500 V
Free air thermal current		6 A
Rated operational current AC-15	230 V	3,5 A
	400 V	2 A
	500 V	1,5 A
Fuse		max. 6 A (gL, gG)
Cross section of connecting wires		0,75 ... 2,5 mm^2

Accessories (for specific order)

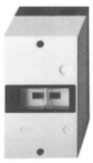

Enclosure
IP 41or IP55

Front plate
IP 41 or IP 55

2NO - PS20
1NO - PS10
1NC - PS01
1NO+1NC - PS11

Auxiliary contact block mountable to booth side

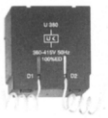

Shunt trip

24...400 V 50 Hz

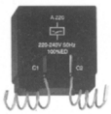

Undervoltage trip

24...400 V 50 Hz

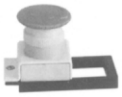

Emergency stop button

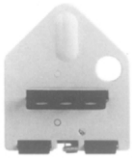

Padlockable element

- Pushbutton diaphragm
- Neutral link
-Signal lamp

Selection of motorstsrter:

Single phase motor starter [kW]	Three-phase motor power [kW]					Setting range of overload release [A]	Rated short -circuit breaking capacity [A]
230 V	230 V	400 V	440 V	500 V	690 V		
		0,02			0,06	0,1 ... 0,16	1,9
		0,06	0,06	0,06	0,09	0,16 ... 0,25	2,6
	0,06	0,09	0,12	0,12	0,18	0,25 ... 0,4	4,4
	0,09	0,12	0,18	0,25	0,25	0,4 ... 0,63	8
0,06 ... 0,09	0,09 ... 0,12	0,18 ... 0,25	0,25	0,37	0,37 ... 0,55	0,63 ... 1	11
0,12	0,18 ... 0,25	0,37 ... 0,55	0,37 ... 0,55	0,55 ... 0,8	0,75 ... 1,1	1 ... 1,6	19
0,18 ... 0,25	0,37	0,75 ... 1,1	0,75 ... 1,1	1,1	1,5	1,6 ... 2,5	30
0,37	0,55 ... 0,8	1,1 ... 1,5	1,5	1,5 ... 2,2	2,2 ... 3	2,5 ... 4	42
0,55 ... 0,75	1,1 ... 1,5	2,2 ... 2,5	2,2 ... 3	3	4	4 ... 6,3	69
1,1 ... 1,5	1,5 ... 2,5	3 ... 4	4 ... 5	4 ... 5,5	5,5 ... 7,5	6,3 ... 10	110
2,2	3 ... 4	5 ... 7,5	5,5 ... 9	7,5 ... 9	11	10 ... 16	210
3	5,5	9	11	11 ... 12,5	15	16 ... 20	220
	5,5 ... 7,5	11 ... 12,5	12,5	15	18,5	20 ... 25	220

2.2 Motorstarter combinations

2.2.1 Opened direct motorstarter

Technical data		 MK contaktor + MH thermal relay	 DLK contactor + H0-2K thermal relay	 DLK contactor (22-37 kW) + T63I thermal relay	 DLK contactor (45-132 kW) + H6 thermal relay
Insulation voltage	[V]	690 V AC	contactor: 690 V AC thermal relay: 500 V AC	690 V AC	contactor: 690 V AC thermal relay: 1000 V AC
Mounting		mounting rail or 2xM4 screws			contactor: 3 x M5 or M6 thermal relay: 4 x M5
Mounting position		vertical plate ± 22,5°			vertical plate ± 10°
Ambient temperature	[°C]	- 25...+50 °C	- 25...+50 °C		
Connection of main circuit	[mm^2]	0,75...2,5	1...6 and 2,5...25	2,5...25	16...50; 35...150 70...150
	screw/Nm	M3,5/1,2	M3,5/1,2...2,5...25	M6/2,5	
Connection of aux. circuit	wire	0,75...2,5	1...2,5	rigid: 1...2,5 flexible: 0,75...1,5	
	ferrule	0,5...4	0,5...4		
Marking of NO auxiliary contacts		13;14	DLK-4...-11: 13;14 DLK-15...-18: 53;54	03;04	13;14 or 43;44

The extreme and middle values of setting range are legible on the turn-knob and on the front plate of relay. The convenient value of the rated operational current of motor should be set to arrow which can be found under the knob.

Main circuit:

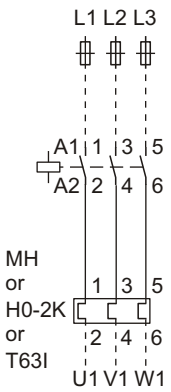

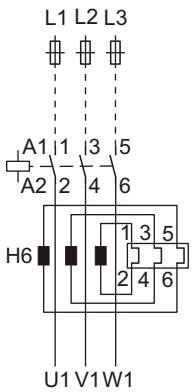

Auxiliary circuit:

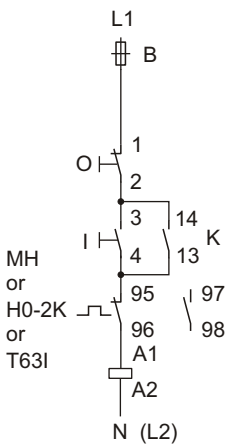

Selection diagrams and tables consist further parameters need to choose the convenient device. (Examples see in item 3).

2.2.2 Opened reversing, two rotating direction motorstarter, respectively

Technical data can be found in item 2.2.1. (The photo shows one auxiliary contact block on the front plate of contactor only). Marking of NO auxiliary contacts (need for self-holding connection) see in item 2.2.1.

Needs of device:

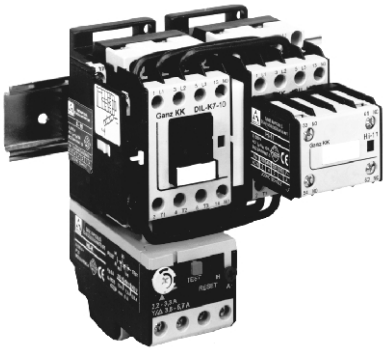

Besides electric lock on behalf on icrease the safety you can place a mechanical interlock between two contactors. Types:
to MK2 and MK4: MB7
to DLK-4-…DLK-18: MV-e
to DLK-22-…DLK-37-: BB

K1 and K2 contactor	Auxiliary contacts on the K1 and K2 contactors	Marking of NC auxiliary contacts
MK2, MK4	KS-11	21, 22
DLK-4-...DLK-11-	Hi-11	61, 62
DLK-15-...DLK-18	Li-11	21, 22
DLK-4-...DLK-18	S 11	31, 32 or 51, 52
DLK-22-...DLK-37-	built-in	91, 92
DLK-45-...DLK-132-	built-in	21, 22 or 31, 32

Main circuit:

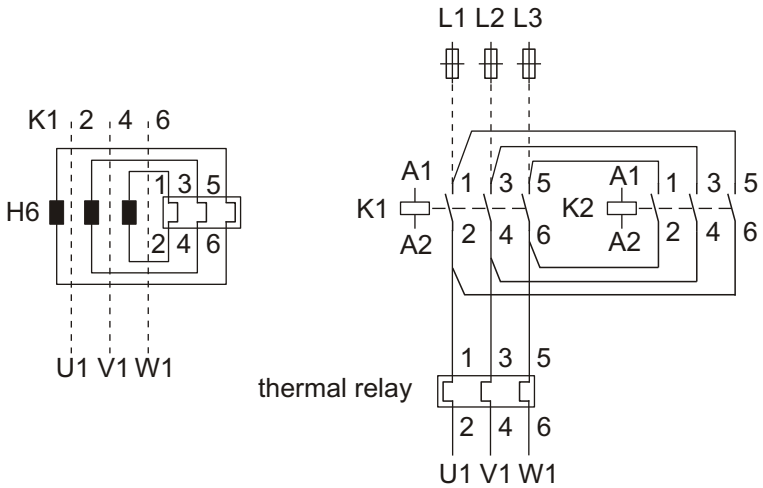

Auxiliary circuit:

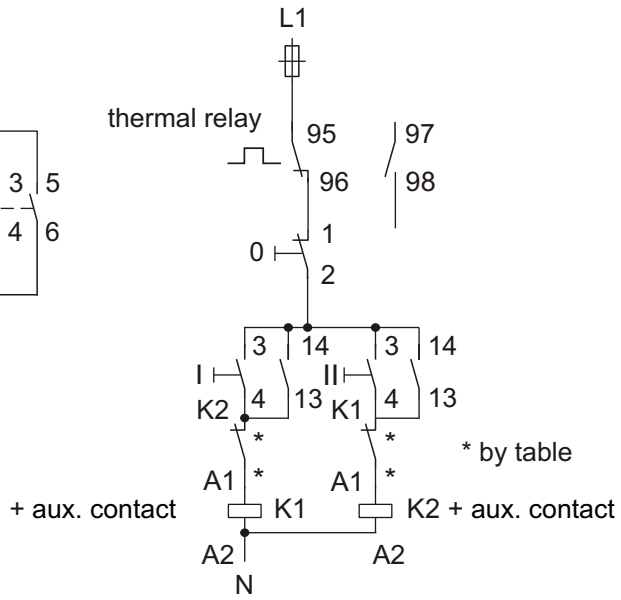

2.2.3 Opened star-delta motorstarter

Technical data can be found in item 2.2.1. (The photo shows one auxiliary contact block on the front plate of contactor only). Marking of NO auxiliary contacts (need for self-holding connection) see in item 2.2.1.

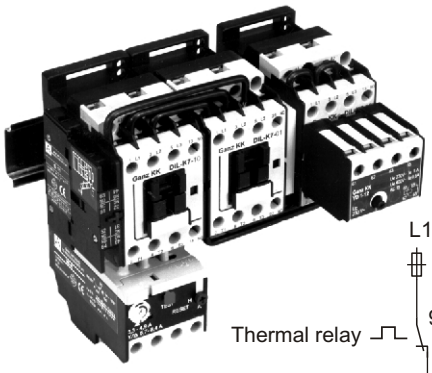

Main circuit:

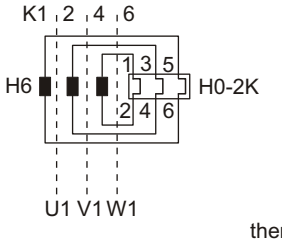

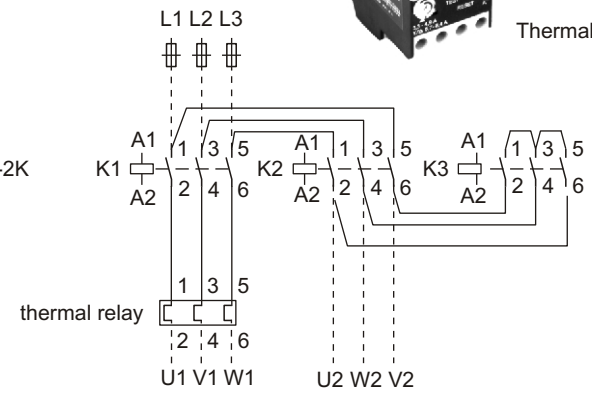

Control circuit:

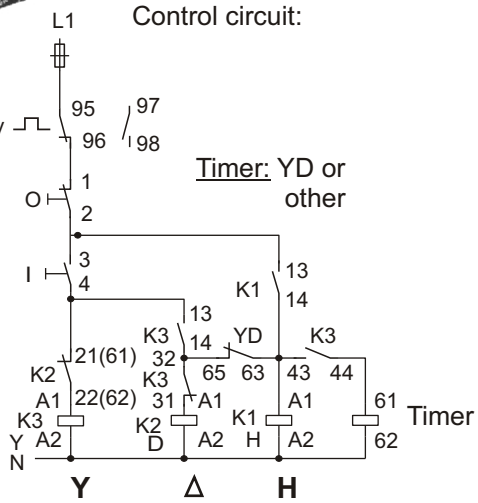

In star scheme the $\sqrt{3}$-part of the line voltage becomes to phase winding of motor, the starting current is 1/3 part of the direct starting current. (The proportion of starting moments is 1/3 too). According to the above arrangement the phase current of motor flows accross the overload relay , but - seeing that the motor works permanently in delta scheme - the scale of relay should be adjusted to convenient value of line current, that is to rated operational current of motor ($\sqrt{3}\ I_f$). (The values of phase currents and line currents are legible too on the scale of H0-2K thermal relay).

Contactor (K)	3 pcs DLK-4-10 or 3 db DLK-5-10	3 pcs DLK-7-10 or 3 db DLK-11-10 *	3 pcs DLK-15 or 3 db DLK-18 *	3 pcs DLK-22-11 or 3 pcs DLK-30-11 or 3 db DLK-37-11 *	3 pcs DLK-45-22 or 3 db DLK-132-22 *
Auxiliary contact block	Hi-11 (to K2) (NC: 61,62) S 11 (to K3) (NO: 43,44, NC: 31,32)	Hi-11 (to K2) (NC: 61,62) S 11 (to K3) (NO: 43,44, NC: 31,32)	2 pcs Li-11 (to K1 and to K2) (NC: 21,22)	1 pcs PKB-11 (to K3) NO: 53,54 or 73,74 NC: 61,62 or 81,82 Built-in: NO: 03,04 NC: 91,92	Built-in: 2 pcs NO: 13,14 and 43,44 2 pcs NC: 21,22 and 31,32
Thermal relay	H0-2K (to K1)	H0-2K (to K1)	H0-2K (to K1) or H6	T63I (to K1) or H6	H6
Timer	YD (to K3)	YD (to K3)	YD (to K3)	other, optional	other, optional
Mechanical interlock	MV-e between K2 and K3	MV-e between K2 and K3	MV-e between K2 and K3	BB between K2 and K3	-

* The K3 contactor (Y-contactor) may be smaller with one degree **O** - OUT push-button **I** - IN push-button

Note: At star-delta combinations made from DLK-4-10…DLK-11-10 contactors the Hi-11 auxiliary contact block is negligible, if use variant DLK-…-01 (with built-in NC auxiliary contact) contactor (K2) as a star-contactor, but in this case does not remain auxiliary contact for signal.

Technical data of YD timer:

Rated insulation voltage	[V]	400 V AC
Rated control circuit voltage	[V]	24, 42, 110, 230, 400V 50 / 60 Hz
Power consumption	[VA]	2
Choosable delay time	[s]	1...12 ± 40 % 2...24 ± 40 %
Time needed to restart of timer	[ms]	min. 300
Mechanical / electrical endurance	[10^6c]	0,5 / 0,1
Degree of protection		IP 20
Contacts		change-over
thermal current	[A]	8
operational current (AC-15) [A]	400 V 230 V 24...110 V	0,6 1,0 1,6
Switching frequency	[c/h]	120
Mounting		to DLK-4…DLK-18 contactors
Connecting wires	[mm^2]	2 x (1...6)
Dimensions	[mm]	45 x 39 x 45 (Box of Hi aux. cont.)

2.3 Motorstarter scheme with asymmetry protection

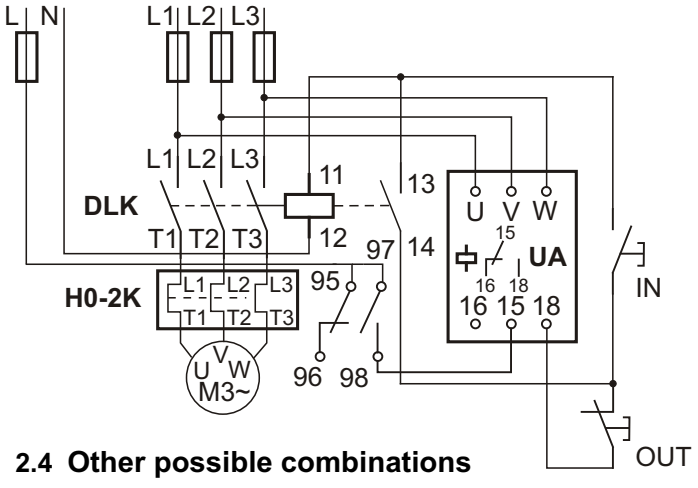

2.4 Other possible combinations

GMV 25f / DLK-… motorstarter
DLK. + miniature circuit breaker (3×1 pole or 2 + 1 pole or 3 pole)
DLK-…+ residual current circuit breaker
DLK-…+ UA asymmetry relay
DLK-…+ VH overheat protection relay
DLK-…+ GLE 5 lighting switch

3. Selection of motorstarters

To select the suitable motorstarter - according to working conditions - you have to know the technical parameters of protected equipment. You should also take into consideration the durability (selection) characteristics of contactors and the fitting conditions of overload (thermal) relays.
Table 1. shows the switchable powers with motorstarters.
Table 2. shows arrangement of contactors and thermal relays, by its nominal data.
Table 3. makes relation between power, rated operational current of three-phase a.c. motors (inner and surface cooling, 1500 r.p.m.) and offered overload relay, the cross section of connecting wires, the offered fuses.
At direct starting (6 × I_e) the running up time is <5 s, Y/D starting (2 x I_e) t_f < 15 s.
In this table the values of operational currents are reckoned from next relation (by rounding up of results):

$$I_e = \frac{P_e \times 10^3}{\sqrt{3} \times U_e \times \quad \times \cos}$$

Table 4. gives the current-ranges of star-delta combinations. Electrical durability (life) of the contactor primarily depend on the break (switch-off) current of the appliance. Diagram 1. shows the accessible number of switching cycles with several types of contactors in most frequent utilization category (AC-3, 400 V) plotted against of break current.
In case of AC-2 and AC-3 utilization categories the break current is equal with the rated operational current of the rated motor power. In case of AC-4 category the break current is six times higher than the rated operational current.

Examples for selection of devices

Example 1.

It is given a three phase asynchron motor with rated power P_e = 11 kW. U_e = 400 V 50 Hz. From Table 3. the rated operational current: I_e = 22 A. In AC-3 utilization category the breaking current is the same. In case of requirement to reach 10^6 durability (see diagram 1.) DLK-11-... type contactor should be selected. As direct motorstarter the setting range of the plugging overload relay (type: H0-2K) should be chosen 16,5...25 A. The scale of relay should be set to 22 A. Fuse in main circuit path should be 50 A. For protect control circuit the offered fuse: 16 A gG.

Example 2.

The motor with P_e = 11 kW (see: previous example) works in utilization category AC-4 (reversing, stepping, plugging, breaking). I_e = 22 A. According to Table 1. DLK-15 contactor is the right selection (P_e = 12,5 kW), but in this case the durability is only 4 × 10^4c. To reach 4 × 10^5 c the right selection is DLK-45-22 contactor.
The H0-2K thermal relay current range is 16,5...25 A in case of selection DLK-15 contactor, and H6 thermal relay with 25…36 A in case of DLK-45-22. Fuses: in main circuit 50 A, in control circuit: 16 A.

Example 3.

Three phase load, in utilization category AC-3 is given a squarrel cage motor with rated power P_e = 15 kW. U_e = 400 V 50 Hz. Starting from zero revs, stopping at rated revolution number (full running speed). Expected durability of machine is 2,5 years. Switching frequency: 250 c/h. The required durability of contactor:
T = 2,5 years × 50 weeks × 40 hours × 250 c/h = 1,25 × 10^6 cycles.
Switching frequency is at least one third of the allowed frequency, so the contactor - according to experience - can be used up to maximum (100 %) motor power.
According to the Diagram 1. of electrical durability DLK-18 contactor should be chosen for 1,25 million cycles with 15 kW motor power. (I_e = 30 A).

In case of direct starting the rated operational current of motor can be read from the label of motor, or it can be determined from Table 2. From this 15 kW → I_e = 30 A.
According to Table 2. the suitable protecting device is or thermal relay H0-2K range: 21,5...32 A, or H6 overload relay with current transfomer, range 25...36 A. Short-circuit protection: 80 A.

Example 4.

It is given a squarrel cage induction motor with rated power P_e = 30 kW, works in star-delta starting. Switching frequency: 20 c/h. U_e = 400 V 50 Hz, utilization category AC-3, three phase load. The overload (thermal) relay is connected between contactor and motor. The expected life-time of the machine is 4 years. The required durability of the contactor: T = 4 years × 50 weeks × 40 hours × 20 c/h = 160 × 10^3 c.
3 pcs DLK-30-11 (or 2 pcs DLK-30-11 and 1 pc DLK-22-11) contactors are suitable for this duty. I_e = 63 A. The suggested thermal relay type is T63I with current-range 52…75 A. The value of the motor's rated operational current (63 A) have to be adjusted by the turn knob. The running up time of the motor is about 15 s, therefore the delay of star-delta timer should be more than 15 s.The short circuit protection is 80 A.
(Note: At reversing combination the above mentioned about direct motorstarters are suggested. Pay attention to the utilization category too).

Example 5.

An unique agricultural machine is working under permanent supervision at switching frequency 40 c/h. The required durability of switching element: > 10^5 c.
40 c/h × 40 hours × 50 weeks = 80000 cycles/year. In the place of application the danger of phase-failure involves from time to time. Power of single phase motor:
0,75 kW, U_e = 230 V 50 Hz. Utilization category: AC-3. For these data the offered switching and protecting device: GMV 25f motorstarter with current-range: 4...6,3 A. (see item 2.1.3). The turn knob should be adjusted to upper current limit. Short-circuit protection is not necessary, but an undervoltage relay with rated voltage 230 V is suggested, to avoid breakdowns and accidents after returning of failed network voltage.

Table 1. Switchable powers of contactors

Type	I_n [A] AC-1	AC-2; AC-3						AC-4	
		230 V		400 V		500 V		400 V	
		P_e [kW]	I_e [A] *	P_e [kW]	I_e [A] *	P_e [kW]	I_e [A] *	P_e [kW]	I_e [A] *
MK2	20	1,5	6,5	2,2	6,5	3	4		
MK4	20	2,2	8,5	4	8,5	5	6,5		
DIL-K4	22	2,2	8,5	4	9	5,5	8,9	3	6,6
DIL-K5	25	3	11,5	5,5	12	7,5	12	4	8,5
DIL-K7	32	4	15,3	7,5	16	11	16,7	5,5	11,5
DIL-K11	32	5,5	20,5	11	22	15	22,5	7,5	15,5
DIL-K15	54	7,5	27,4	15	30	18,5	28,5	12,5	22
DIL-K18	54	11	39,2	18,5	37	20	30,5	15	30
DIL-K22X	85	15	52,6	22	44	30	33	7,5	15,5
DIL-K30X	85	18,5	65	30	63	37	44	9	18
DIL-K37X	85(95)	22	75,2	37	72	45	54	10	21
DIL-K45X	140	30	101	45	85	45	64,5	15	30
DIL-K55X	140	37	124	55	105	55	79	18,5	36
DIL-K75X	225	45	150	75	140	75	106	25	43
DIL-K90X	225	55	181	90	170	90	128	30	57
DIL-K110X	350	75	245	110	205	110	156	37	70
DIL-K132X	350	90	292	132	250	132	186	45	85

* Estimated value

Table 2. Fit of contactors and thermal relays

Limitation of current-setting (I_{emax})	(AC-3, 230-500 V)	AC-4 (400V)
DLK-4:	max. 9 A	max. 6,6 A
DLK-11:	max. 22 A	max. 15 A
DLK-15:	max. 30 A	max. 25 A
DTMn-K11:	max. 20 A	max. 5,5 kW

3-phase motor AC-3				Thermal relay [A]	Fuse [A]	Contactor MK			Thermal relay [A]	Fuse [A]	Contactor DLK						Thermal relay [A]	Fuse [A]	Contactor DLK			Thermal relay [A]	Fuse [A]	Contactor DLK					
230 V P_e [kw]	230 V I_e [A]	400 V P_e [kw]	400 V I_e [A]	MH	MH	2	4				4	5	7	11	15	18	T 63I	T 63I	22	30	37	H6	H6	45	55	75	90	110	132
to 0,12	to 0,78	to 0,25	to 0,88	0,16 - 0,25	1	■	■	H 0 - 2 K	0,2 - 0,3	2 - 2	■																		
				0,25 - 0,4	2	■	■		0,3 - 0,45	2 - 2	■																		
				0,44 - 0,6	2	■	■		0,45 - 0,67	2 - 2	■																		
				0,6 - 0,9	4	■	■		0,67 - 1,0	2 - 2	■	■																	
0,25	1,4	0,55	1,5	0,9 - 1,3	6	■	■		1,0 - 1,5	2 - 4	■	■																	
0,37	2,1	0,75	2	1,3 - 1, 9	6	■	■		1,5 - 2,2	4 - 10	■	■																	
0,75	3,3	1,1	2,6	1,9 - 2,8	10	■	■		2,2 - 3,3	4 - 10	■	■	■																
1,1	4,9	1,5	3,5	2,8 - 4	10	■	■		3,3 - 4,9	6 - 16	■	■	■																
-	-	2,2	5			■	■		4,9 - 7,3	10 - 20	■	■	■	■	■														
-	-	3	6,6	4 - 6	16	■	■				■	■	■	■	■														
2,5	9,8	4	8,5	6 - 9	20		■		7,3 - 11	16 - 25	■	■	■	■	■	■													
-	-	5	10,5	8 - 11	20							■	■	■	■	■													
3	11,5	5,5	11,5	11 - 14	25				11 - 16,5	20 - 35			■	■	■	■													
4	15,3	7,5	15,5										■	■	■	■													
5,5	20,6	11	22						16,5 - 25	35 - 50				■	■	■													
7,5	27,5	15	30						21,5 - 32	35 - 50					■	■	21 - 30	50 - 63	■	■	■								
								H6	25 - 36	50 - 80						■			■	■	■								
11	39,2	18,5	37						25 - 36	50 - 80						■	30 - 40	50 - 80	■	■	■	25 - 36	50 - 80	■					
15	52,6	22	44																■	■	■	34 - 51	63 - 100	■	■				
18,5	64,9	30	60														43 - 63	63 - 100		■	■	51 - 76	100 - 160	■	■	■	■		
22	75,2	37	72														52 - 75	80 - 125			■			■	■	■	■		
30	101	45	85																			76 - 113	160 - 200	■	■	■	■	■	■
37	124	55	105																						■	■	■	■	■
45	150	75	140																			113 - 168	200 - 250			■	■	■	■
55	181	90	170																								■	■	■
75	245	110	205																			168 - 250	250 - 315					■	■
90	292	132	250																										■

Table 3. Setting current-ranges of motorstarter combinations

Motor power AC-1 P_e [kW]	cos j	h [%]	I_e [A] (AC-3)			Contactor			Fuse [A]			Thermal relay [A]				Cu wire [mm^2]
			230 V	400 V	500 V	230 V	400 V	500 V	230 V	400 V	500 V	Típus	230 V	400 V	500 V	
0,06	0,7	59	0,38	0,22	-	**DLK-4**	**DLK-4**	**-**	2 - 2	2 - 2	-	**H0-2K**	0,30 - 0,45	0,20 - 0,30	-	1,5
0,06	0,7	59	0,38	-	-	**MK 2**	**-**	**-**	2 - 2	-	-	**MH**	0,25 - 0,4	-		1,5
0,12	0,7	61	0,76	0,42	0,33	**DLK-4**	**DLK-4**	**DLK-4**	2 - 2	2 - 2	2 - 2	**H0-2K**	0,67 - 1,0	0,3 - 0,45	0,3 - 0,45	1,5
0,12	0,7	61	0,76	0,42	0,33	**MK 2**	**MK 2**	**MK 2**	2 - 2	2 - 2	2 - 2	**MH**	0,25 - 0,4	0,25 - 0,4	0,25 - 0,4	1,5
0,18	0,7	61	1,10	0,64	0,46	**DLK-4**	**DLK-4**	**DLK-4**	2 - 4	2 - 2	2 - 2	**H0-2K**	1,0 - 1,5	0,45 - 0,67	0,45 - 0,67	1,5
0,18	0,7	61	1,10	0,64	0,46	**MK 2**	**MK 2**	**MK 2**	2 - 4	2 - 2	2 - 2	**MH**	0,9 - 1,3	0,4 - 0,6	0,4 - 0,6	1,5
0,25	0,7	62	1,40	0,88	0,59	**DLK-4**	**DLK-4**	**DLK-4**	2 - 4	2 - 2	2 - 2	**H0-2K**	1,0 - 1,5	0,67 - 1,0	0,45 - 0,67	1,5
0,25	0,7	62	1,40	0,88	0,59	**MK 2**	**MK 2**	**MK 2**	2 - 4	2 - 2	2 - 2	**MH**	0,9 - 1,3	0,6 - 0,9	0,4 - 0,6	1,5
0,55	0,75	69	2,70	1,50	1,20	**DLK-4**	**DLK-4**	**DLK-4**	4 - 10	2 - 4	2 - 2	**H0-2K**	2,2 - 3,3	1,0 - 1,5	1,0 - 1,5	1,5
0,55	0,75	59	2,70	1,50	1,20	**MK 2**	**MK 2**	**MK 2**	4 - 10	2 - 4	2 - 2	**MH**	2,8 - 4	0,9 - 1,3	0,9 - 1,3	1,5
0,75	0,8	74	3,30	2,0	1,48	**DLK-4**	**DLK-4**	**DLK-4**	4 - 10	4 - 10	2 - 2	**H0-2K**	2,2 - 3,3	1,5 - 2,2	1,0 - 1,5	1,5
0,75	0,8	74	3,30	2,0	1,48	**MK 2**	**MK 2**	**MK 2**	4 - 10	4 - 10	2 - 2	**MH**	2,8 - 4	1,9 - 2,8	0,9 - 1,3	1,5
1,1	0,83	77	4,9	2,6	2,1	**DLK-4**	**DLK-4**	**DLK-4**	6 - 10	4 - 10	4 - 10	**H0-2K**	3,3 - 4,9	2,2 - 3,3	1,5 - 2,2	1,5
1,1	0,83	77	4,9	2,6	2,1	**MK 2**	**MK 2**	**MK 2**	4 - 10	4 - 10	4 - 10	**MH**	4 - 6	1,9 - 2,8	1,3 - 1,9	1,5
1,5	0,83	78	6,2	3,5	2,6	**DLK-4**	**DLK-4**	**DLK-4**	10 - 20	6 - 16	4 - 10	**H0-2K**	4,9 - 7,3	3,3 - 4.9	2,2 - 3,3	1,5
1,5	0,83	78	6,2	3,5	2,6	**MK 2**	**MK 2**	**MK 2**	10 - 20	4 - 10	4 - 10	**MH**	6 - 9	2,8 - 4	2,8 - 4	1,5
2,2	0,83	81	8,7	5,0	3,8	**DLK-4**	**DLK-4**	**DLK-4**	16 - 25	10 - 20	6 - 10	**H0-2K**	7,3 - 11,0	4,9 - 7,3	3,3 - 4,9	1,5
2,2	0,83	81	8,5	6,5	3,8	**MK 4**	**MK 2**	**MK 2**	16 - 25	10 - 16	6 - 16	**MH**	8 - 11	4 - 6	4 - 6	1,5
3,0	0,84	81	11,6	6,6	5,1	**DLK-7**	**DLK-4**	**DLK-4**	20 - 35	10 - 20	10 - 16	**H0-2K**	11 - 16,5	4,9 - 7,3	4,9 - 7,3	1,5
3,0	0,84	81	11,6	6,6	5,1	**MK 4**	**MK 4**	**MK 2**	16 - 25	10 - 20	10 - 16	**MH**	11 - 14	8 - 11	4 - 6	1,5

Thermal relays, motorstarters

Motor power P_e [kW]	cos j	h [%]	I_e [A] (AC-3)			Contactor			Fuse [A]			Thermal relay [A]				Cu wire [mm^2]
			230 V	400 V	500 V	230 V	400 V	500 V	230 V	400 V	500 V	Típus	230 V	400 V	500 V	
4,0	0,84	82	15,3	8,5	6,5	**DLK-7**	**DLK-4**	**DLK-4**	20 - 35	16 - 25	10 - 16	**H0-2K**	11 - 16,5	7,3 - 11	4,9 - 7,3	1,5
4,0	0,84	82	8,5	8,5	6,5	**MK 4**	**MK 4**	**MK 4**	20 - 35	16 - 25	10 - 16	**MH**	6 - 9	6 - 9	6 - 9	1,5
5,5	0,85	83	20,6	11,5	8,9	**DLK-11**	**DLK-5**	**DLK-4**	35 - 50	20 - 35	16 - 20	**H0-2K**	16,6 - 25	11 - 16,5	7,3 - 11	2,5
7,5	0,86	85	27,4	15,5	11,9	**DLK-15**	**DLK-7**	**DLK-7**	35 - 50	20 - 35	20 - 25	**H0-2K**	21,5 - 32	11 - 16,5	11 - 16,5	4,0
7,5	0,86	85	27,4	15,5	11,9	**DLK-18**	**-**	**-**	50 - 60	-	-	**H6**	25 - 36	-	-	4,0
11,0	0,86	87	39,2	22,0	16,7	**-**	**DLK-11**	**DLK-11**	-	35 - 50	35 - 50	**H0-2K**	-	16,5 - 25	16,5 - 25	6,0
11,0	0,86	87	39,2	22,0	16,7	**DLK-22**	**-**	**-**	50 - 80	-	-	**T63I**	30 - 40	-	-	6,0
15,0	0,86	87	52,6	30,0	22,5	**-**	**DLK-15**	**DLK-11**	-	35 - 50	35 - 50	**H0-2K**	-	21,5 - 32	16,5 - 25	10,0
15,0	0,86	87	52,6	30,0	22,5	**DLK-22**	**DLK-22**	**-**	63 - 100	50 - 63	-	**T63I**	43 - 63	21 - 30	-	10,0
15,0	0,86	87	52,6	30,0	22,5	**DLK-22**	**DLK-22**	**-**	100 - 160	50 - 80	-	**H6**	51 - 76	25 - 36	-	10,0
18,5	0,86	88	64,9	37,0	28,5	**-**	**DLK-18**	**DLK-15**	-	35 - 50	35 - 50	**H0-2K**	-	21,5 - 32	21,5 - 32	10,0
18,5	0,86	88	64,9	37,0	28,5	**DLK-30**	**DLK-22**	**-**	80 - 125	50 - 80	-	**T63I**	52 - 75	30 - 40	-	10,0
18,5	0,86	88	64,9	37,0	28,5	**DLK-30**	**DLK-22**	**-**	100 - 160	63 - 100	-	**H6**	51 - 76	34 - 51	-	10,0
22,0	0,87	89	75,2	44,0	33,0	**DLK-37**	**DLK-22**	**DLK-22**	80 - 125	63 - 100	50 - 80	**T63I**	52 - 75	43 - 63	30 - 40	16,0
22,0	0,87	89	75,2	44,0	33,0	**DLK-37**	**DLK-22**	**DLK-22**	100 - 160	63 - 100	50 - 80	**H6**	51 - 76	34 - 51	25 - 36	16,0
30,0	0,87	90	101	63	44	**-**	**DLK-30**	**DLK-30**	-	80 - 125	63 - 100	**T63I**	-	52 - 75	43 - 63	25,0
30,0	0,87	90	101	63	44	**DLK-45**	**-**	**-**	160 - 200	-	-	**H6**	76 - 113	-	-	25,0
37,0	0,87	90	124	72	54	**-**	**DLK-37**	**DLK-37**	-	80 - 125	63 - 100	**T63I**	-	52 - 75	43 - 63	35,0
37,0	0,87	90	124	72	54	**DLK-55**	**-**	**-**	100 - 160	-	-	**H6**	51 - 76	-	-	35,0

Motor power P_e [kW]	cos j	h [%]	I_e [A] (AC-3)			Contactor			Fuse [A]			Thermal relay [A]				Cu wire [mm^2]
			230 V	400 V	500 V	230 V	400 V	500 V	230 V	400 V	500 V	Típus	230 V	400 V	500 V	
45	0,88	91	150	85	65	**DLK-75**	**DLK-45**	**DLK-45**	200 - 315	200 - 315	160 - 250	**H6**	113 - 168	76 - 113	34 - 51	50
55	0,88	91	181	105	79	**DLK-90**	**DLK-55**	**DLK-55**	315 - 500	160 - 250	80 - 125	**H6**	168 - 250	76 - 113	51 - 76	70
75	0,88	91	245	140	106	**DLK-110**	**DLK-75**	**DLK-75**	315 - 500	160 - 200	100 - 160	**H6**	168 - 250	113 - 168	76 - 113	95
90	0,88	92	292	170	128	**-**	**DLK-90**	**DLK-90**	-	315 - 500	160 - 250	**H6**	-	168 - 250	113 - 168	120
110	0,88	92	358	205	156	**-**	**DLK-110**	**DLK-110**	-	315 - 500	160 - 250	**H6**	-	168 - 250	113 - 168	150 or rail
132	0,88	92	425	245	186	**-**	**DLK-132**	**DLK-132**	-	315 - 500	160 - 250	**H6**	-	168 - 250	168 - 250	150 or rail

Table 4. Setting current-ranges of star-delta combinations

Motor power P_e [kW]	cos j	h [%]	I_e [A] (AC-3)			Contactor	Fuse [A]			Thermal relay [A]				Cu wire [mm^2]
			230 V	400 V	500 V	3 db	230 V	400 V	500 V	Típus	230 V	400 V	500 V	
4,0	0,84	82	15,3	8,5	6,5	**DLK-4**	20	10	10	**H0-2K**		7,3 - 11		1,5
5,5	0,85	83	20,6	11,5	8,9	**DLK-5**	25	16	10	**H0-2K**		7,3 - 11		2,5
7,5	0,86	85	27,4	15,5	11,9	**DLK-7**	35	20	16	**H0-2K**		11 - 16,5		4,0
11	0,86	87	32,2	22,0	16,7	**DLK-11**	50	25	20	**H0-2K**		11 - 16,5		6,0
15	0,86	87	52,5	30,5	22,5	**DLK-15**	63	35	25	**H0-2K**		16,5 - 25		10,0
18,5	0,86	88	64,9	37,0	28,5	**DLK-18**	80	50	35	**H0-2K**		16,5 - 25		10,0
22	0,87	89	75,2	44,0	33,0	**DLK-22-11**	80	50	50	**T63I**		21 - 30		16,0
30	0,87	90	101	63	44	**DLK-30-11**	125	63	50	**T63I**		30 - 40		25,0
37	0,87	90	124	72	54	**DLK-37-11**	160	80	63	**T63I**		43 - 62		35,0
45	0,88	91	150	85	64,5	**DLK-45-22**	160	100	80	**H6**		51 -76		50,0
55	0,88	91	181	105	79	**DLK-55-22**	200	125	100	**H6**		76 -113		70,0
75	0,88	91	245	140	106	**DLK-75-22**	250	160	125	**H6**		76 - 113		95,0
90	0,88	92	292	170	128	**DLK-90-22**	315	200	160	**H6**		113 - 168		150 or rail
110	0,88	92	358	205	156	**DLK-110-22**	400	250	200	**H6**		113 - 168		150 or rail
132	0,88	92	425	245	186	**DLK-132-22**	500	250	200	**H6**		168 - 250		

Diagram 1. Electrical durability related to the break current

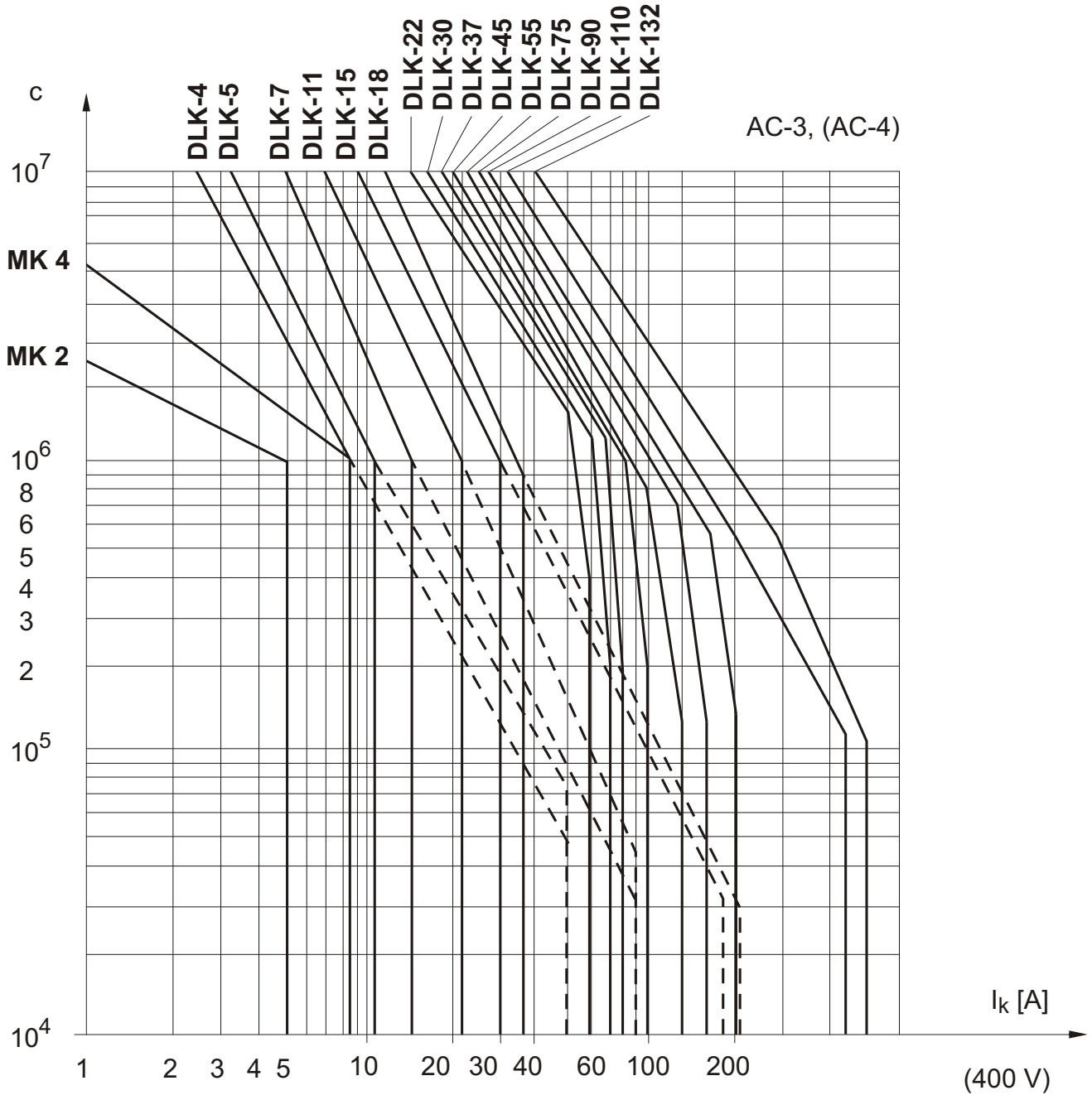

Curves indicated as "------" refer to the expected number of switching cycles in AC-4 utilization category at DLK-4-…DLK-18 contactors

4. Dimensions

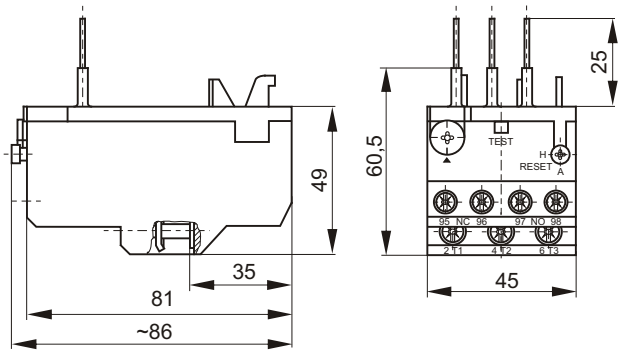

H0-2K thermal relay after removing the fixing and connecting elements (it can be plugged to a DLK-4-…DLK-18 contactor)

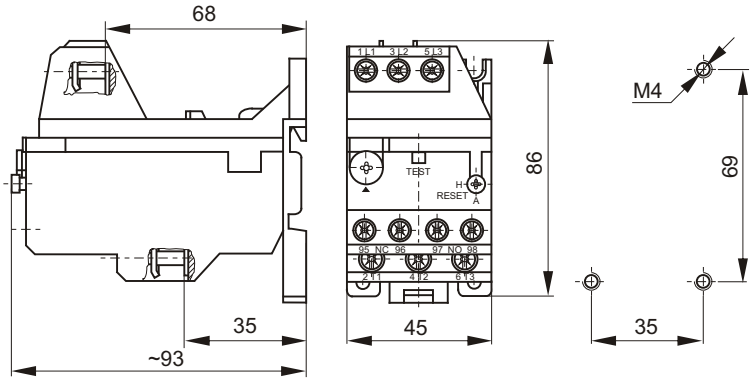

H0-2K thermal relay snapped on a raill

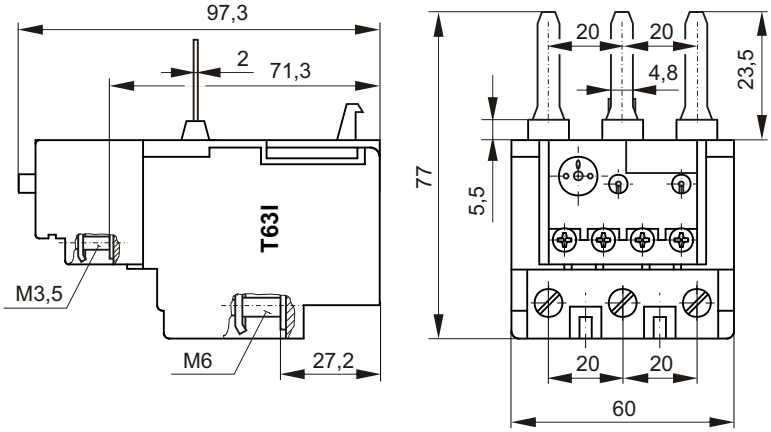

T63I thermal relay

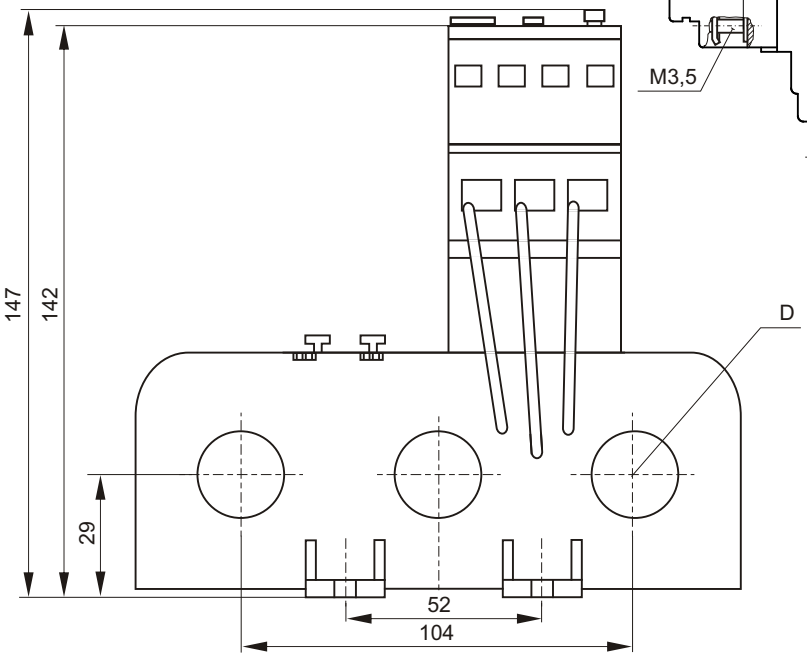

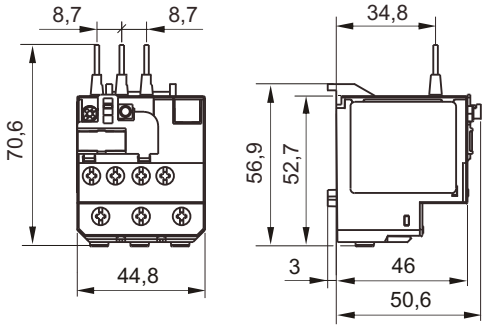

MH mini thermal relay

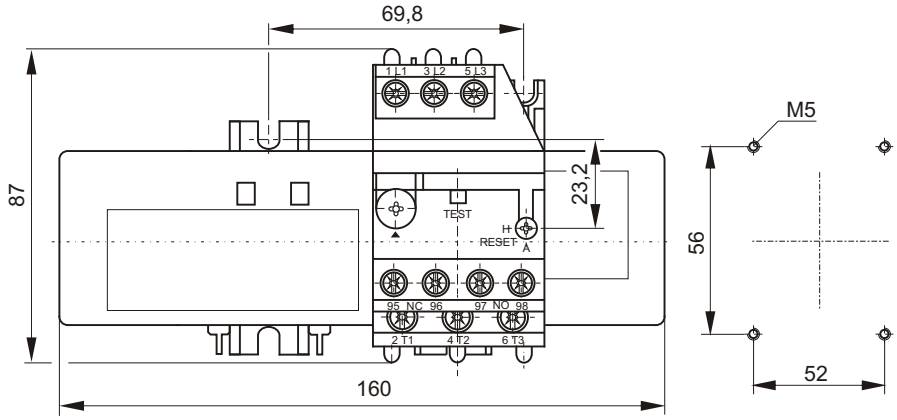

H6 thermal relay with current transformer

Range (A)	D [mm]
25...36 Y / D 43...62	Ć 12
34...51 Y / D 59...88	
51...76 Y / D 88...131	Ć 22
76...113 Y / D 131...195	
113...168 Y / D 195...290	
168...250 Y / D 290...432	

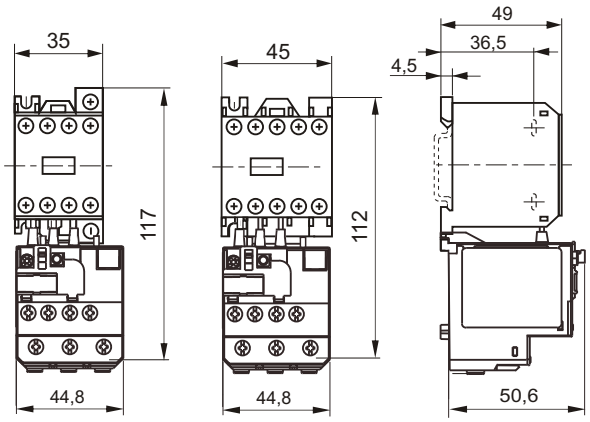

MK + MH plugged motorstarter combination

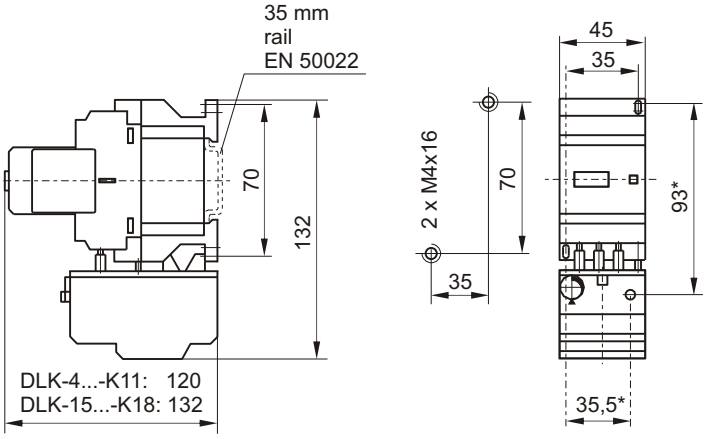

DLK + H0-2K plugged motorstarter combination

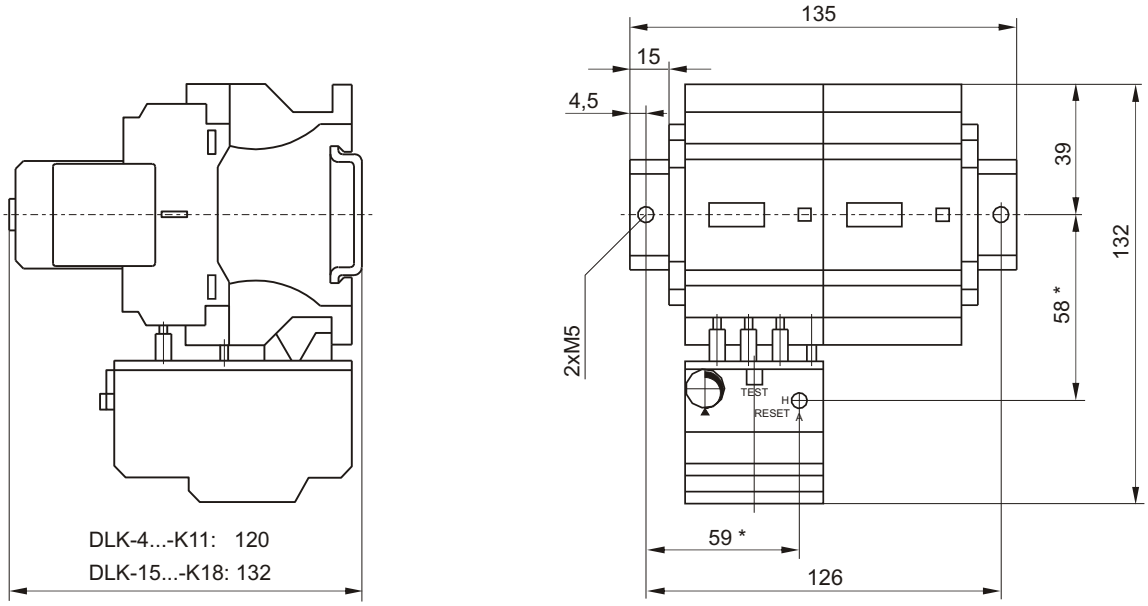

DLK + H0-2K reversing motorstarter combination

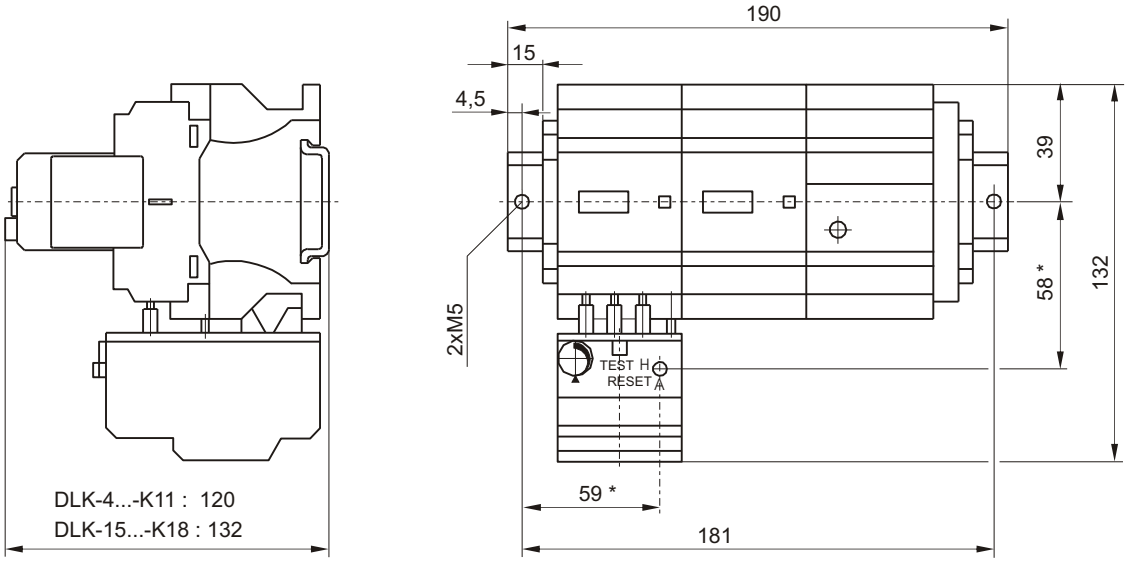

DLK + H0-2K star-delta motorstarter combination

Dimensions marked by * show position of resetting knob of thermal relay

Dimensions marked by
* show need to snap of
auxiliary contact block

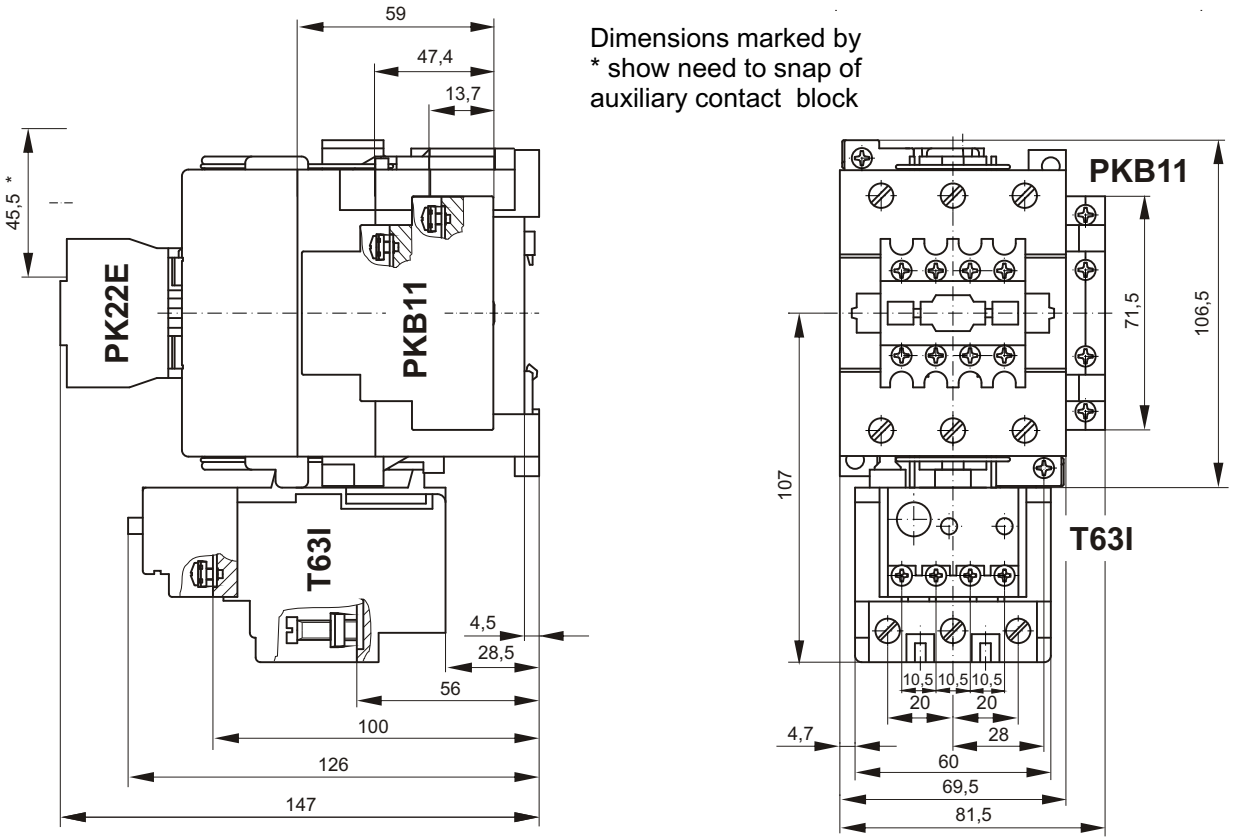

DLK + T63I plugged motorstarter combination

Motorstarter

Auxiliary contact

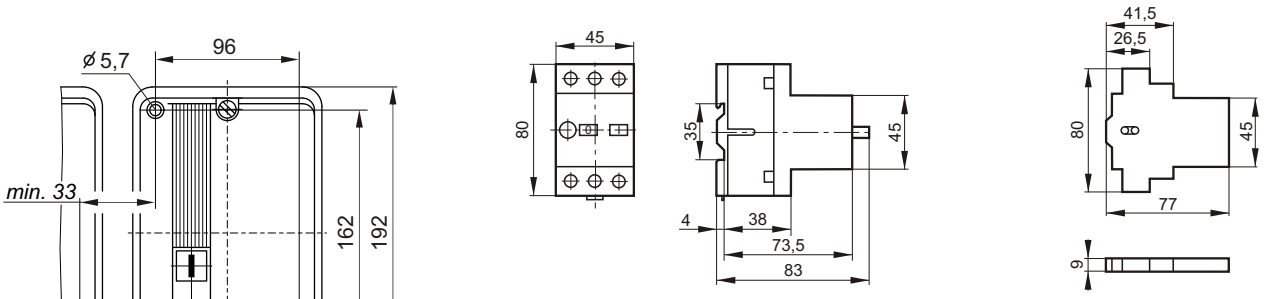

Front plate (IP 41 or IP 55)

Enclosure (IP 41 or IP 55)

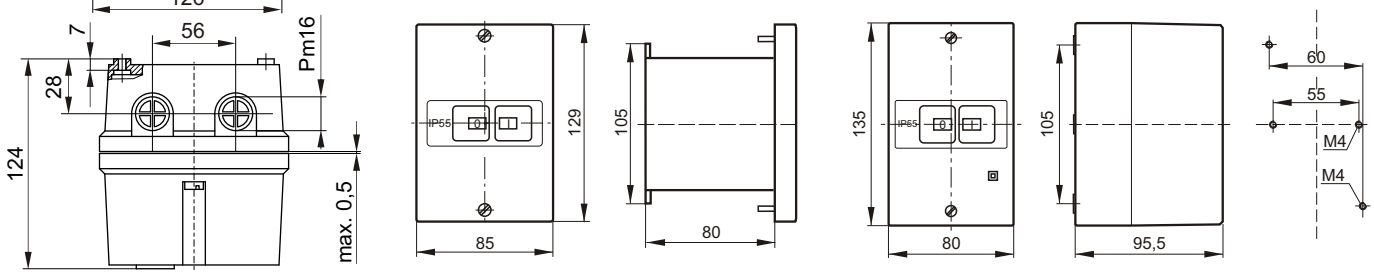

DTMn-K5 and DTMn-K11
enclosed motorstarter

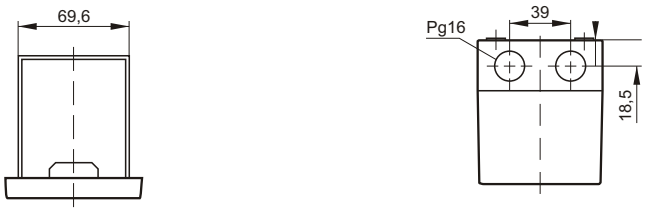

GMV 25f manual motorstarter

Extracion from EN 60947-4-1:2002 standard

Table 1. Utilization categories

AC-1: Non-inductive or slightly inductive loads, resistance furnaces

AC-2 : Slip-ring motors: starting, switching off

AC-3 : Squirrel-cage motors: starting, switching off motors during running

AC-4 : Squirrel-cage motors: starting, plugging, inching

DC-3 : Shunt-motors: starting, plugging, inching, dinamic breaking of d.c. motors

DC-5 : Series-motors: starting, plugging, inching, dinamic breaking of d.c. motors

3.2. Definitions concerning starters

3.2.1. **Starter (IEV 441-14-38)**

The combination of all the switching means necessary to start and stop a motor in combination with suitable overload protection.

3.2.2. **Direct-on-line starter [IEV 441-14-40]**

A starter which connects the line voltage across the motor terminals in one step.

3.2.3. **Reversing starter**

Starter intended to cause the motor to reverse the direction of rotation by reversing the motor primary connections while the motor may be running.

3.2.4. **Two-direction starter**

Starter intended to cause the motor to reverse the direction of rotation by reversing the motor primary connections only when the motor is not running.

3.2.5.1. **Star-delta starter [IEV 441-14-44]**

A starter for a three-phase induction motor such that in the starting position the stator windings are connected in star and in the final running position they are connected in delta.

3.2.7. **Combination starter**

Equipment consisting of a starter, a manual externally operated switching device and a short-circuit protective device, mounted and wired in a dedicated enclosure. The switching and short-circuit protective devices may be a fuse combination unit, a switch with fuses or a circuit-breaker with or without an insolating function.

Note 1. A dedicated enclosure is an enclosure specifically designed and dimensioned for its application in which all tests are conducted.

Note 2. The manually operated switching device and the short-circuit protective device may be just one device and may incorporate the overload protection as well.

3.2.8. **Protected starter**

Equipment consisting of a starter, a manually operated switching device and a short-circuit protective device, mounted and wired, enclosed or unenclosed according to the instructions of the starter manufacturer.

Note:
The manually operated switching device and the short- circuit protective device may be one single device and may incorporate the overload protection as well.

3.2.9 **Manual starter [IEV 441-14-39]**

A starter in which the force for closing the main contacts is povided exclusively by manual energy.

3.2.10 **Electromagnetic starter**

A starter in which the force for closing the main contacts is povided by an electromagnet.

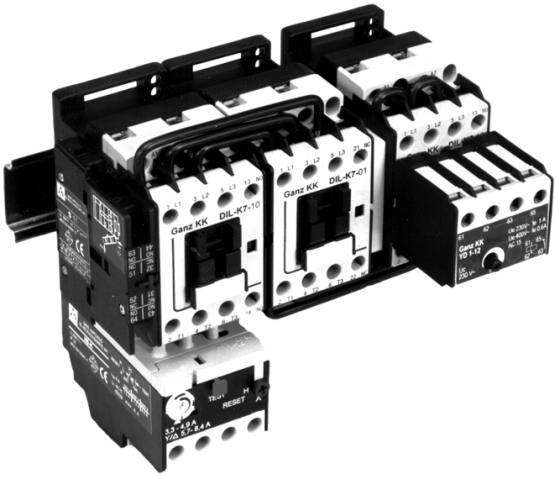

Star-delta
motorstarter combination

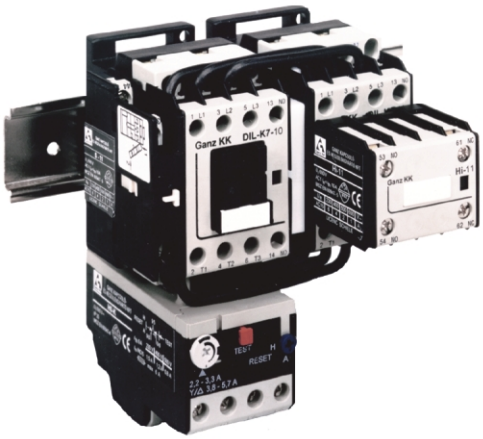

Reversing
motorstarter combination

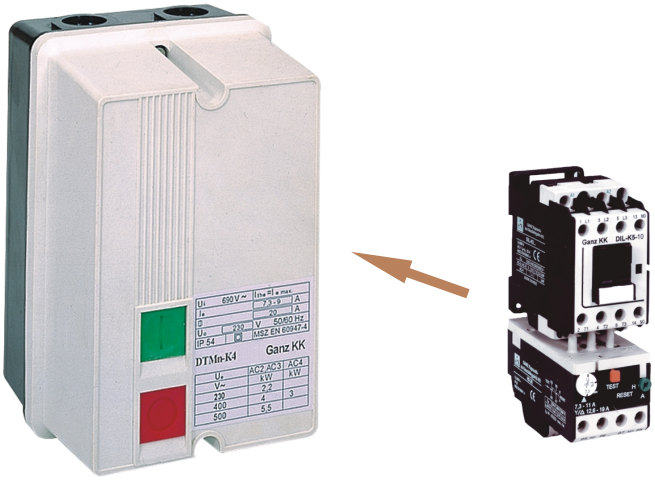

DTMn-K… enclosed motorstarter

GMV 25f manual motorstater

Enclosed version IP41 or IP 55

Version with front plate IP41 or IP 55

GANZ Kapcsoló- és Készülékgyártó Kft.

Hungary, Budapest X., Kőbányai út 41/C
Phone: (36-1) 261-1115
E-mail: ganzkk@ganzkk.hu

PO.Box: H-1475 Pf.: 87.
Telefax:(36-1) 261-7670
www.ganzkk.hu

GanzKK

2008.10.